2020-10-12

Manfrotto
Imagine More

ART. MVR901EPLA

For serial number
from XXXXXXXX

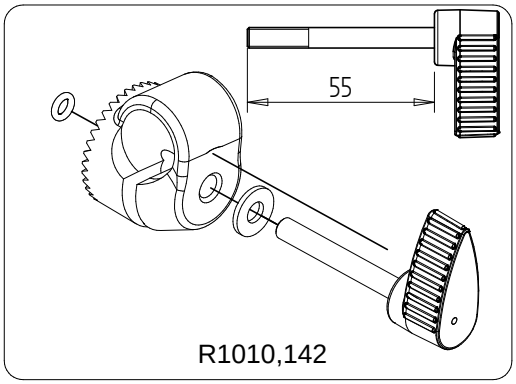

R1010,142

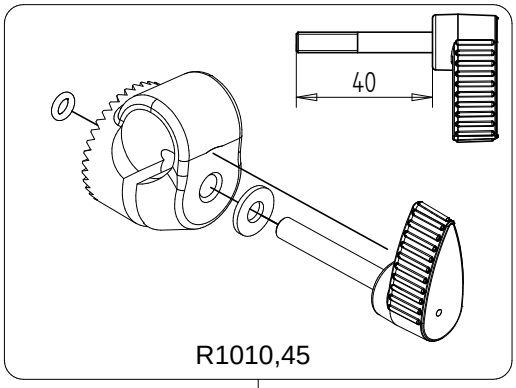

R1010,45

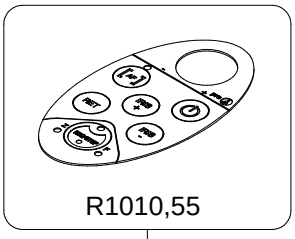

R1010,55

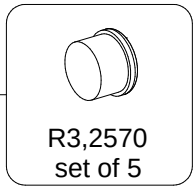

R3,2570
set of 5

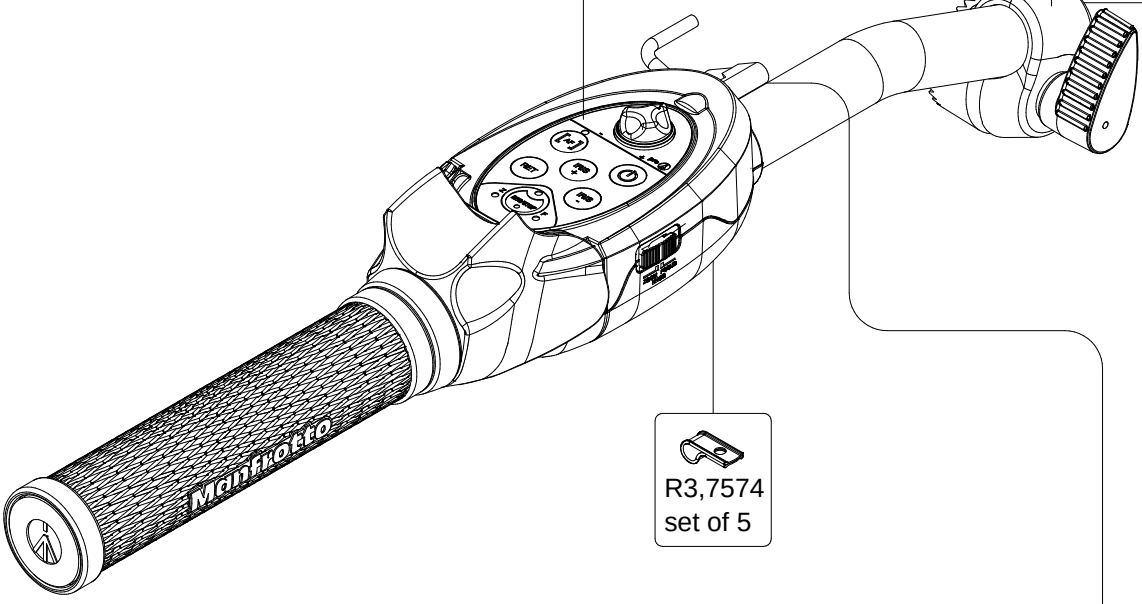

R3,7574
set of 5

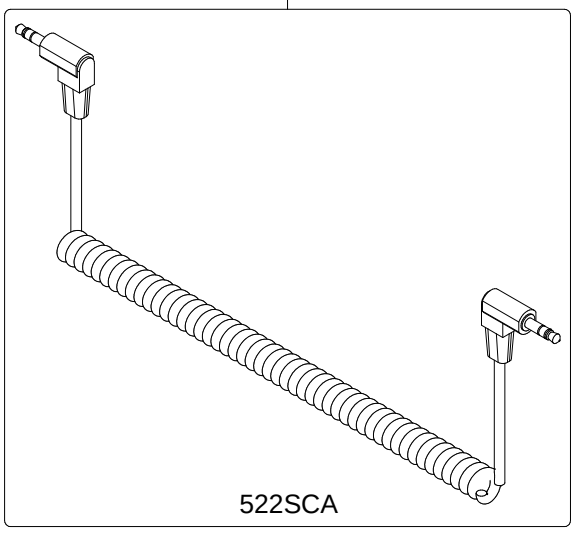

522SCA